https://hmmwvsystems.com

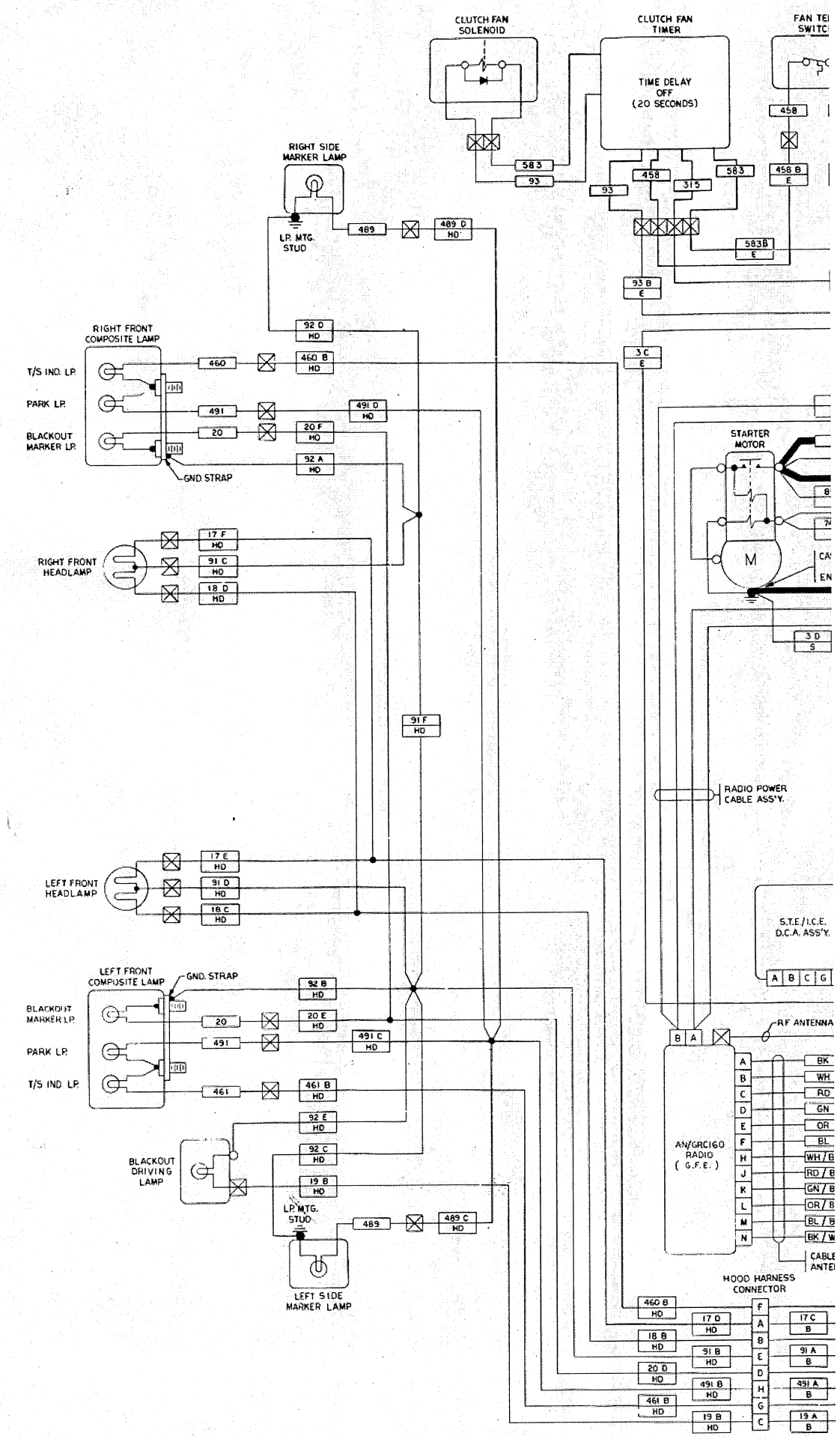

https://hmmwvsystems.com

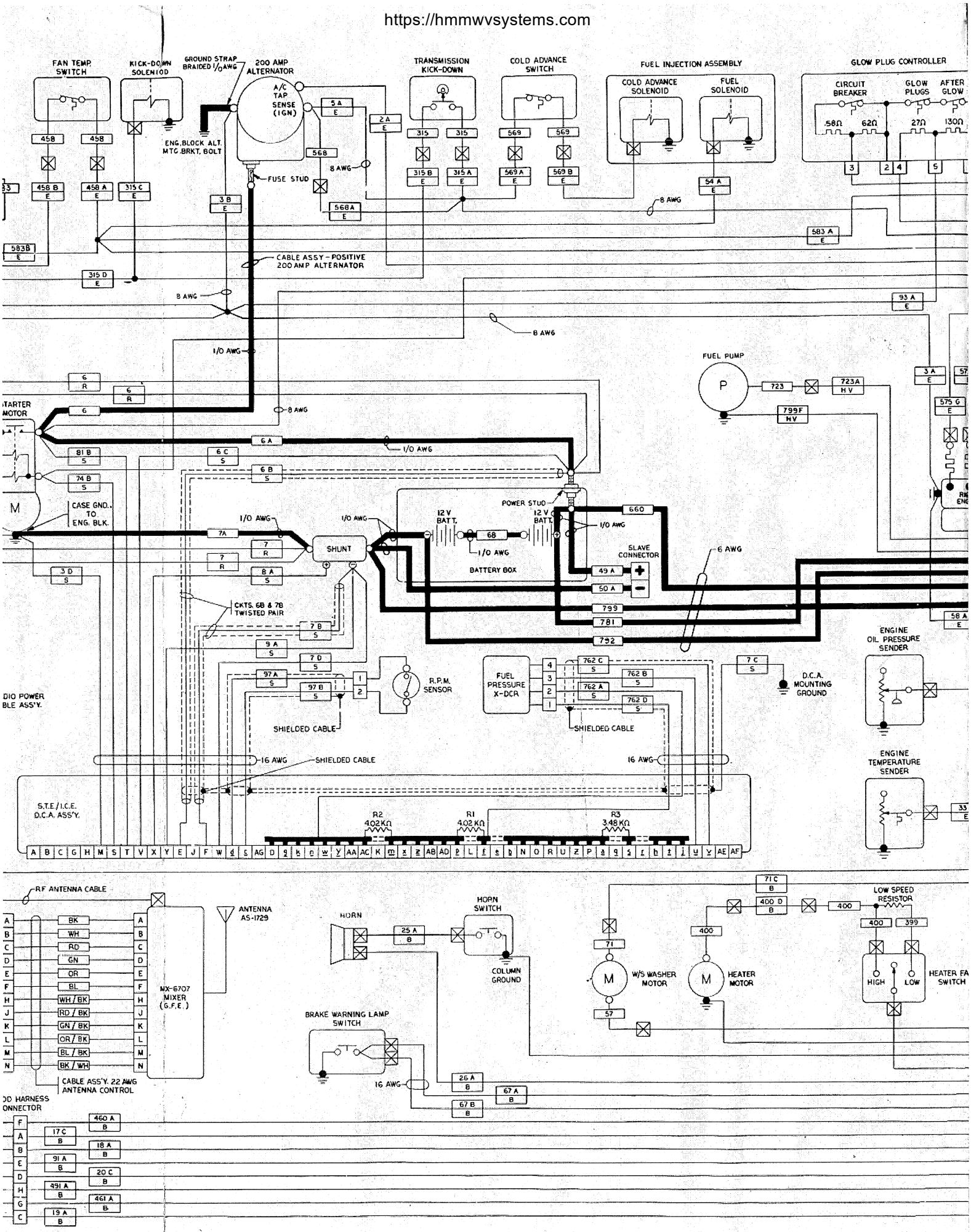

https://hmmwvsystems.com

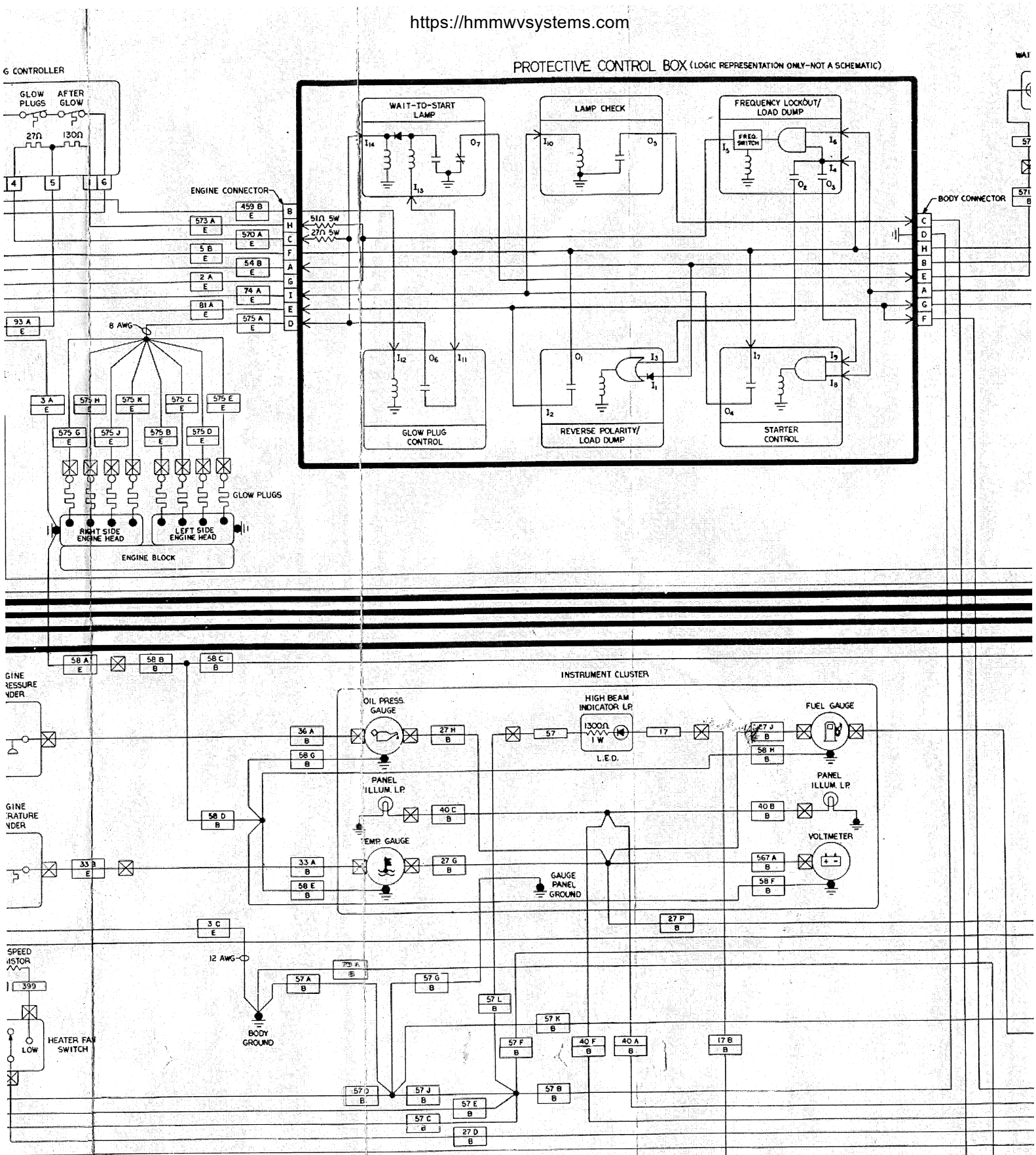

https://hmmwvsystems.com

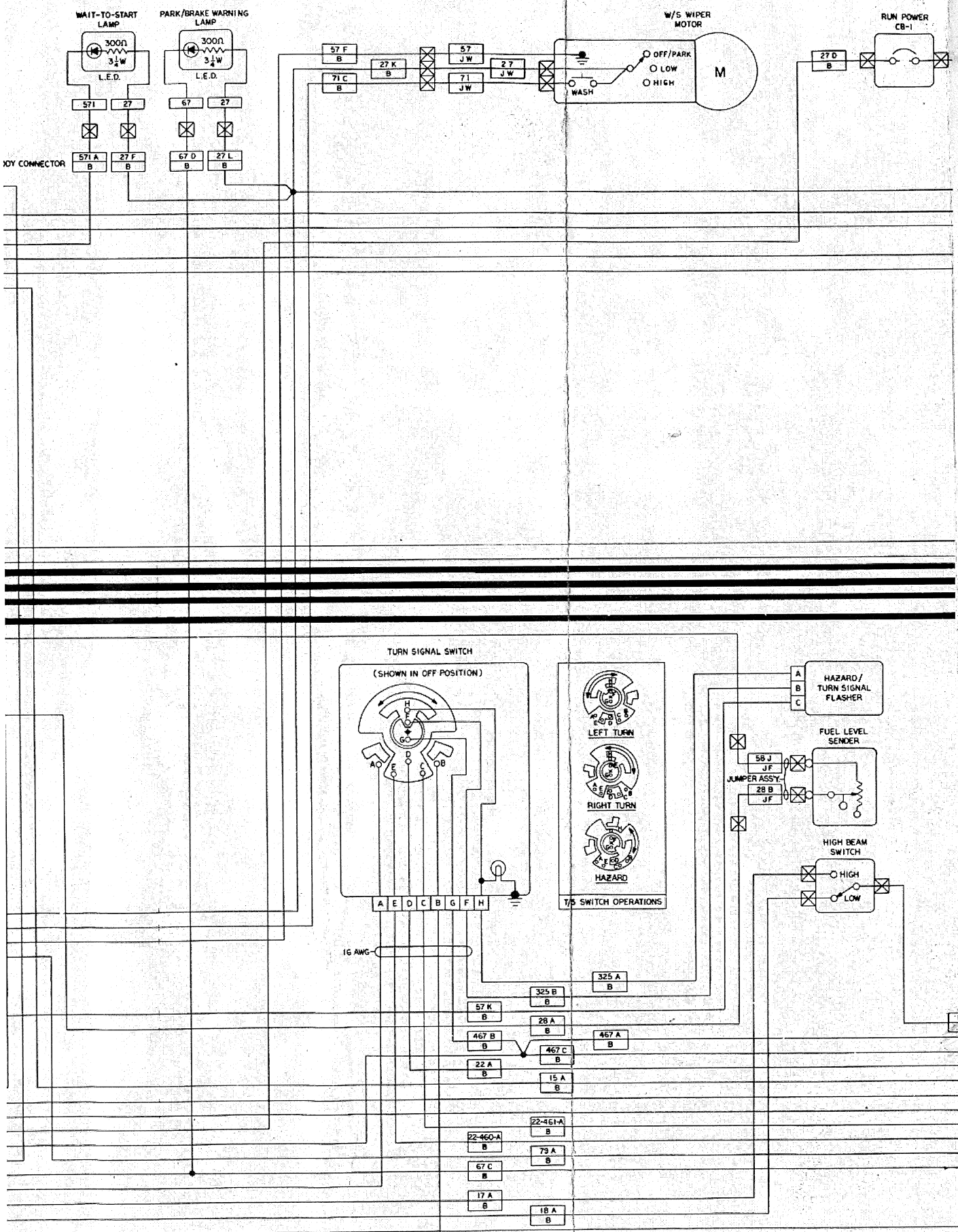

FO-2. 1

https://hmmwvsystems.com

FO-2. Electrical System Wiring Diagram (M996).